Dwight Look College of
ENGINEERING
TEXAS A&M UNIVERSITY

Team 19: Radar Rangers
Bi-Weekly Update 4

Eva Framjee, Neil Garcia, Sterling Light
Sponsor: Dr. Arya Menon
TA: Roman Venegas

Project Summary

- Devices can't detect breathing and heart rate without wearable sensors, causing discomfort.
- Provide a fully contactless method for tracking breathing patterns and heart rate which can be read easily via mobile devices.

Human has irregular breathing pattern or heart rate → Millimeter Wave Radar detects data, microcontroller checks if its normal → If not normal, the data is sent to the mobile application → Mobile Application notifies user or irregularities

Integrated System Diagram

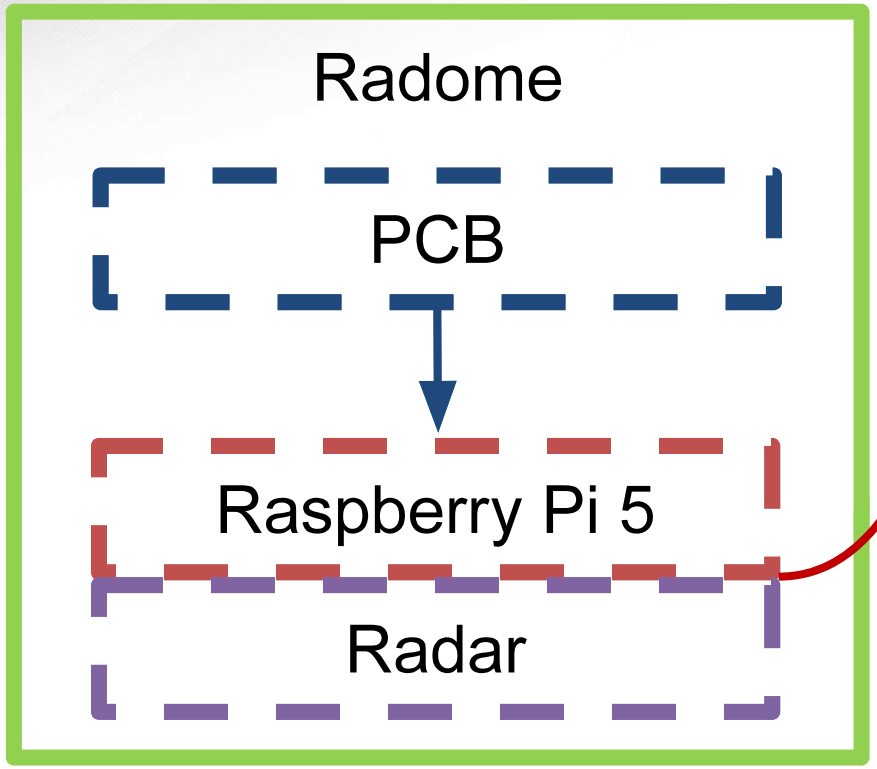

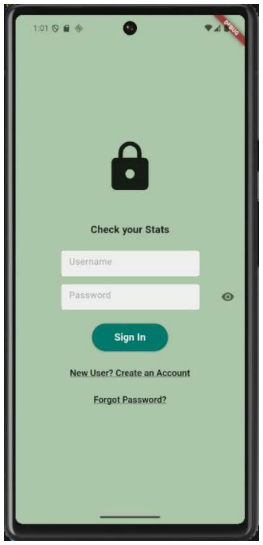

Radome & PCB: Sterling
RasPi & Radar: Neil
Mobile Application: Eva

Project Timeline

Second design for PCB completed and out for fabrication: PCBA option ordered (original deadline 2/25)	Finalizing radome design and ensuring accommodation for new PCB design (original deadline 3/4)	Designed App logo so when pressed the app code and RasPi 5 code is ran (completed 3/1)	Completed integration between mobile application and Radar (completed 3/1)	System Test against different test cases (to complete by 3/15)	Validation (to complete by 4/5)	Demo and Report (to complete by 4/10)

Dwight Look College of ENGINEERING TEXAS A&M UNIVERSITY

Raspberry Pi and Radar Integrated with Mobile Application

Neil Garcia and Eva Framjee

Accomplishments since last update 19 hrs of effort	Ongoing progress/problems and plans until the next presentation
- Phone and Radar Module are 100% connected - Code for app is able to read the AI model from the Raspberry Pi to send notifications - Rolling waveforms with live data - Phone stores data - Created app icon that opens the app from the phone	- Run test cases to ensure it works efficiently. - Continue to work on code that runs when app opens

Dwight Look College of ENGINEERING
TEXAS A&M UNIVERSITY

Raspberry Pi and Radar Integrated with Mobile Application

Neil Garcia and Eva Framjee

PCB and Radome Design

Sterling Light

Accomplishments since last update 51 hrs of effort	Ongoing progress/problems and plans until the next presentation
- New PCB designed, tested, and sent out for fabrication; will arrive soldered - Radome updated to accommodate new board design	- Integrate PCB with other boards upon arrival - Finalize radome design and submit for manufacturing - Integrate radome with rest of system upon arrival

PCB and Radome Design

Sterling Light

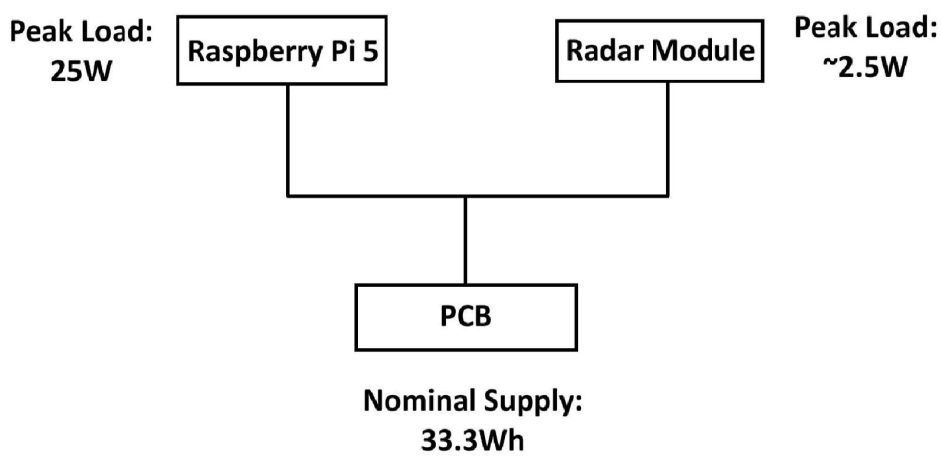

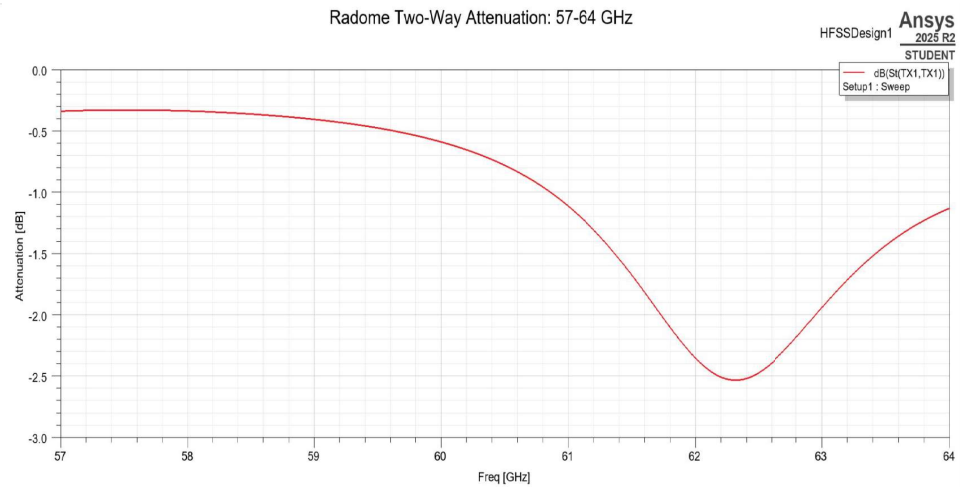

Dwight Look College of ENGINEERING TEXAS A&M UNIVERSITY

Execution Plan

Task Title	Start Date	End Date	SU1	SU2	SU3	SU4	SU5
Status Update 1: 01/21/26							
Create appropriate axis titles in the app as well as a users manual	01/14/26	02/02/26					
Establish a Wi-Fi Direct system on the Raspberry Pi	01/14/26	02/02/26					
Ensure PCB sustainably powers Pi and radar module	01/14/26	02/02/26					
Status Update 2: 02/04/26							
Setup bluetooth between the Raspberry Pi and the application	02/04/26	02/16/26					
Develop a program that will transfer live data values to phone via Bluetooth	02/04/26	02/16/26					
Status Update 3: 02/18/26							
Test between different people	02/18/26	03/02/26					
Coordinate with other members to connect subsystems together	02/18/26	03/02/26					
Fabricate radome	02/18/26	03/02/26					
Status Update 4: 03/04/26							
Ensure the app successfully connects between the application and the machine	03/04/26	03/23/26					
Fully construct radar apparatus	03/04/26	03/23/26					
Status Update 5: 03/25/26							
Prepare for Demo	03/25/26	04/06/26					
Final Presentation: 04/08/26							
Final Demo							
Showcase							
Final Report							

Dwight Look College of ENGINEERING TEXAS A&M UNIVERSITY

SYSTEM Validation Plan

FR ID	Functional Requirement	Success Criteria	Validation Method	Tested?
3.2.1.4.	App and Radar successfully connected via Bluetooth	Data from radar is read successfully from the app	Test subject sits in room and monitors via app	YES
3.2.3.7.3	Radar stores data in csv file in cloud that sends data to application	Radar data is successfully stored in a cloud CSV file and fully received by the application without data loss	Run a radar capture and verify the CSV file is created in the cloud and correctly parsed by the app	YES
3.2.1.1.	Detect Heart Rate within 10 beats per minute	Detected heart rate is within +/- 10 BPM of a reference measurement for at least 95% of tests	Compare radar heart rate to a reference sensor across multiple trials and calculate error	YES
3.2.1.1.	Detects Respiratory Rate within 5 breaths per minute	Detected respiratory rate is within +/- 5 breaths per minute of a reference measurement for at least 95% of tests	Compare respiratory rate to a reference breathing measurement during controlled breathing tests	YES
3.2.1.1.	Machine learning model needs to be accurate within 0% false negatives and <1% false positives	The ML model produces 0% false negatives and less than 1% false positives on validation data	Evaluate model performance using labeled test data and compute false negative and false positive rates	YES
3.2.1.3.	Detects person at least 10 ft away	System detects a person at distances up to at least 10 ft with reliable performance	Place a subject at varying distances up to 10 ft and verify detection consistency	YES
3.2.3.6.	PCB effectively powers Raspberry Pi 5	PCB supplies stable power to the Raspberry Pi 5 without resets or undervoltage events	Power the Raspberry Pi 5 from the PCB and monitor operation and voltage stability	NO
3.2.1.4.	App will properly identify and display different incoming data types	App correctly identifies and displays all supported incoming data types without errors	Send test packets for each data type and verify correct display in the app	YES
3.2.3.7.1.	Radome design allows radio waves to propagate with minimal disturbance	Radome causes minimal signal loss, with insertion loss than or equal to 3 dB	Measure or simulate signal transmission through the radome and compare to no-radome baseline	NO
3.2.2.2.4	Radome protects the IWRL6432BOOST Raspberry Pi 5, and PCB Power Supply from damage	Radome fully encloses and protects internal components from physical damage during normal handling	Inspect enclosure fit and perform basic handling tests to confirm continued system operation.	NO

Dwight Look College of
ENGINEERING
TEXAS A&M UNIVERSITY

Thank you!